OpenGUT v1

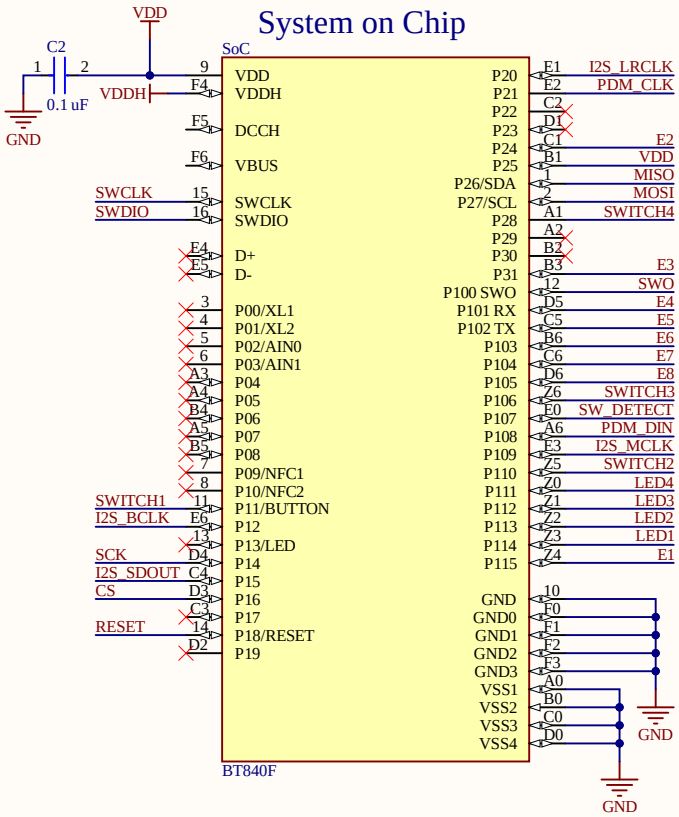

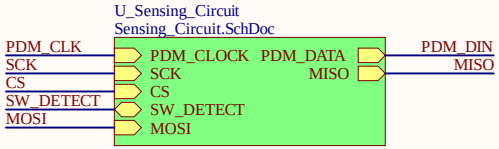

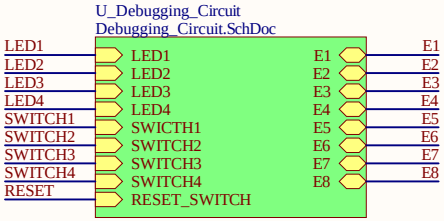

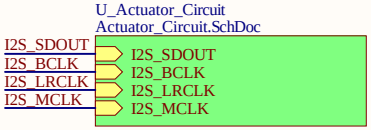

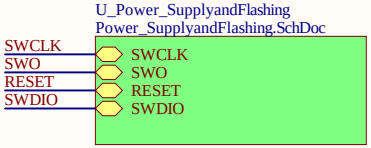

Title OpenGUT		
Size A4	Number PROJ-OpenGUT-01	Revision 00
Date: 2/25/2026		Sheet 1 of 5
File: C:\NUS\..\BT840F_SoC.SchDoc		Drawn By: Muftee Mysan

Power Supply and Flashing Circuit

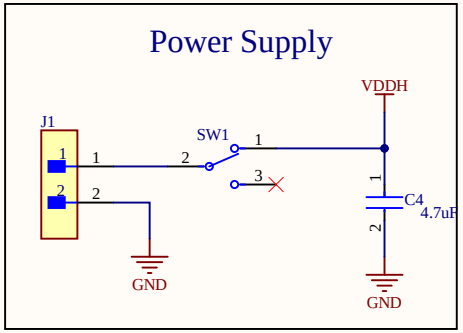

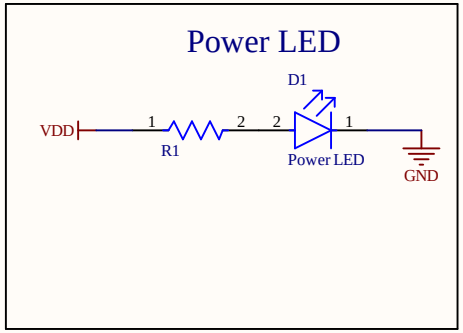

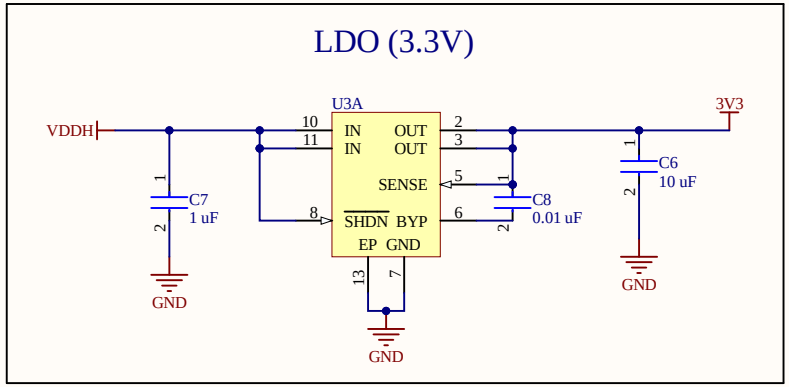

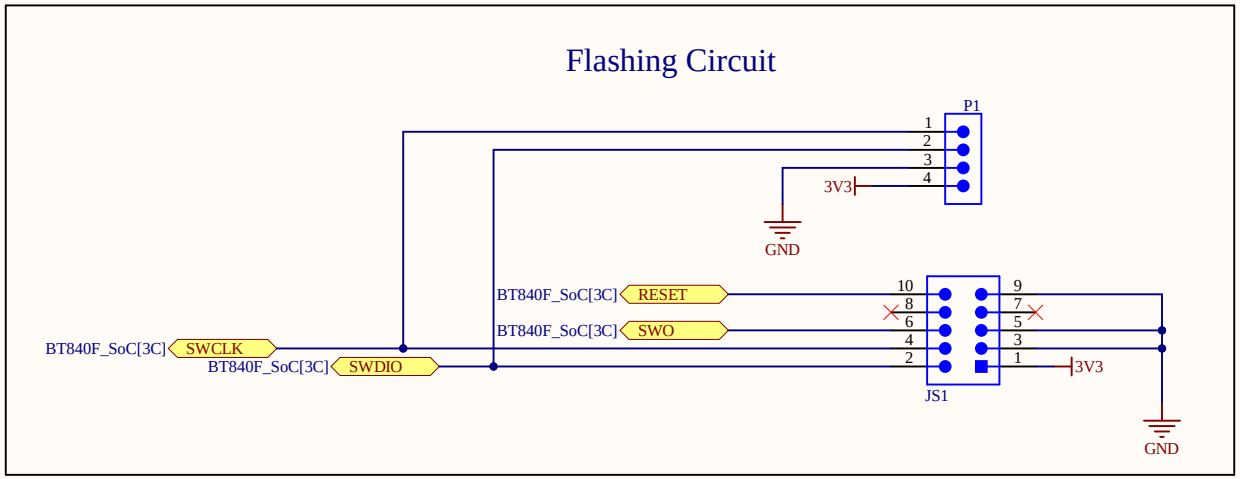

Title	OpenGUT	
Size A4	Number PROJ-OpenGUT-02	Revision 00
Date: 2/25/2026	Sheet 1 of 5	
File: C:\NUS\..\Power_SupplyandFlashing.SchDoc	Drawn By: Muftee Mysan	

Sensing Circuit

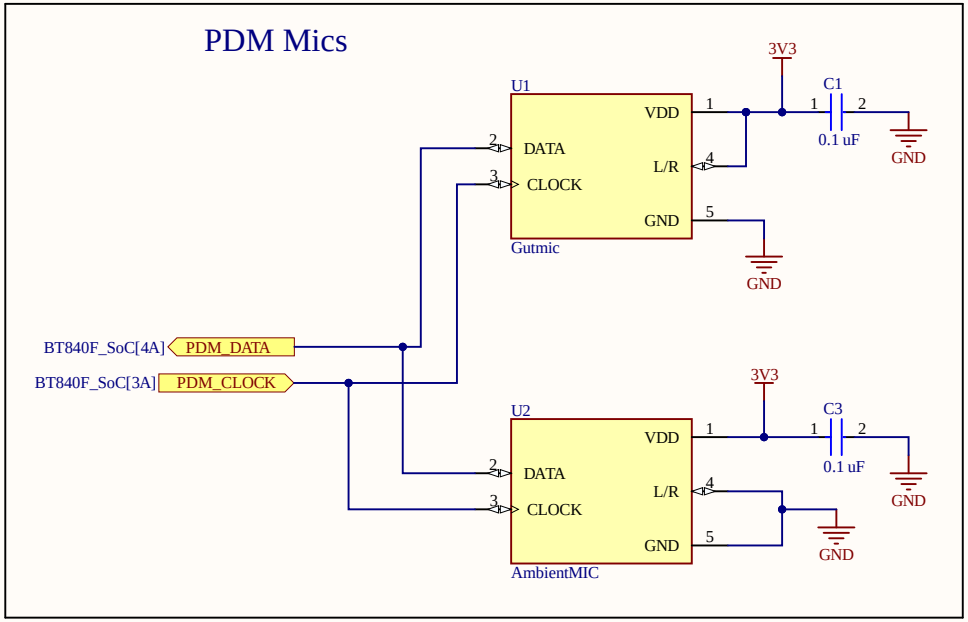

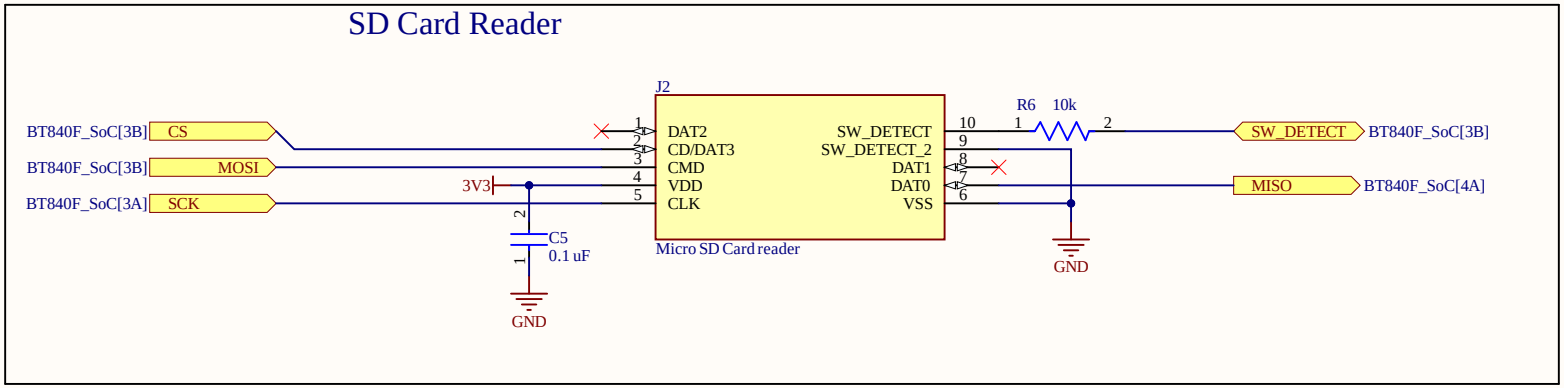

Title	OpenGUT		
Size A4	Number PROJ-OpenGUT-03		Revision 00
Date: 2/25/2026		Sheet 3 of 5	
File: C:\NUS\..\Sensing_Circuit.SchDoc		Drawn By: Muftee Mysan	

Debugging Circuit

LEDS

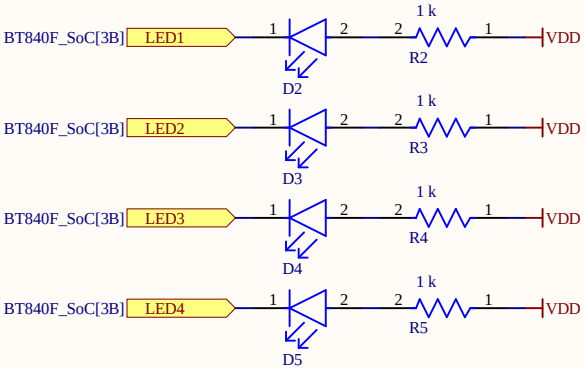

Switches

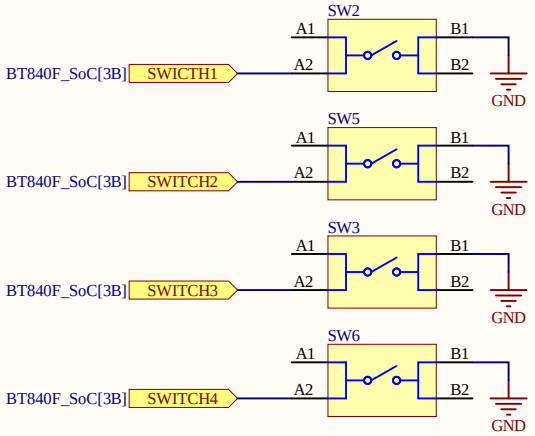

Connectors

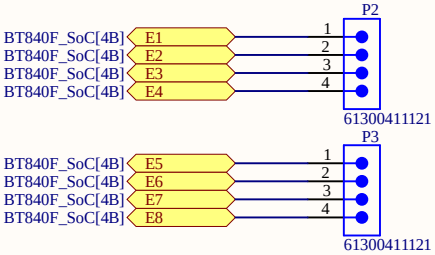

RESET SWITCH

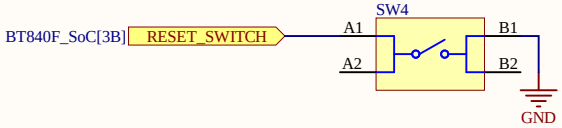

Title OpenGUT		
Size A4	Number PROJ-OpenGUT-04	Revision 00
Date: 2/25/2026	Sheet 4 of 5	
File: C:\NUS\..\Debugging_Circuit.SchDoc	Drawn By: Muftee Mysan	

Actuator Circuit

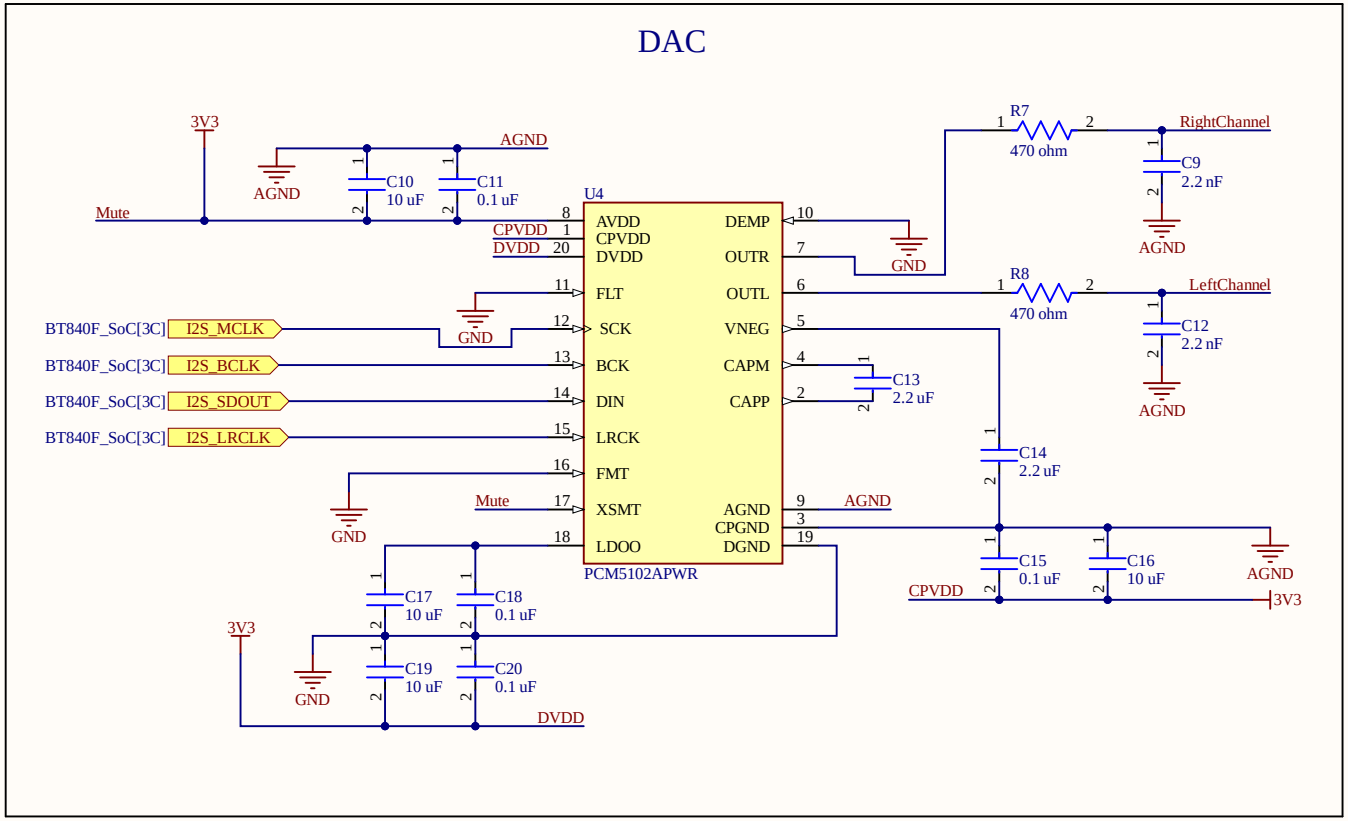

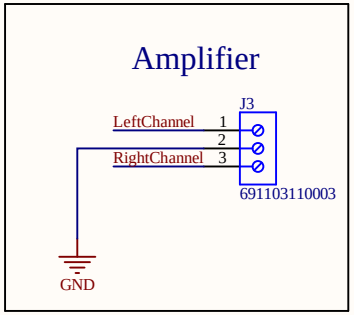

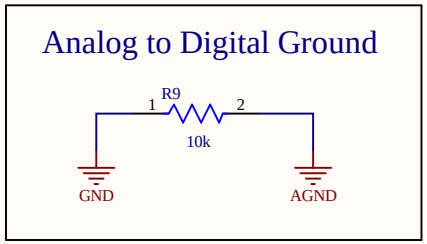

Title OpenGUT		
Size A4	Number PROJ-OpenGUT-05	Revision 00
Date: 2/25/2026	Sheet 5 of 5	
File: C:\NUS\..\Actuator_Circuit.SchDoc	Drawn By: Muftee Mysan	

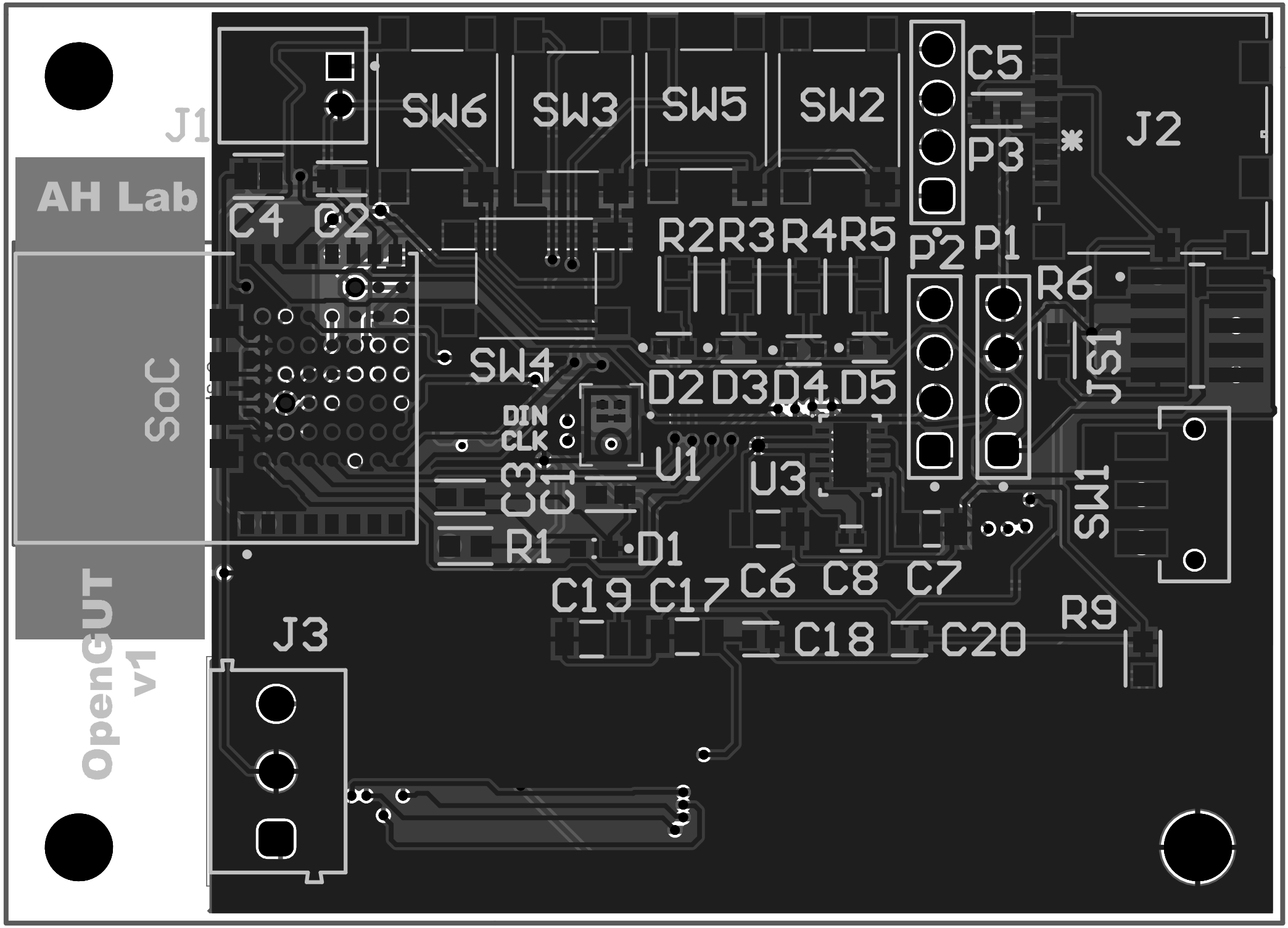
J1
SW6
SW3
SW5
SW2
C5
P3
J2
AH Lab
C4
C2
R2
R3
R4
R5
P2
P1
R6
SW4
D2
D3
D4
D5
JS1
SoC
DIN
CLK
U1
U3
SW1
R1
D1
C19
C17
C6
C8
C7
R9
J3
C18
C20
OpenGUT
v1

Line #	Name	Description	Designator	Revision ID	Revision Status	Quantity	Manufacturer 1	Manufacturer Part Number 1	Manufacturer Lifecycle 1	Supplier 1	Supplier Part Number 1	Supplier Unit Price 1	Supplier Subtotal 1
	GCG188R91H104MA01D	AgPd Termination Conductive Glue Mounting Chip Multilayer Ceramic Capacitors for Automotive 0.1uF with 20% as tolerance, 50V X8R 15%, 0603 Package	C1, C2, C3, C5	CMP-06035-011350-1	Up to date	4	Murata	GCG188R91H104MA01D	Volume Production	Mouser	81-GCG188R91H104MA1D	0.28	1.12
	C2012X6S0J475K125AB	Multilayer Ceramic Capacitors 4.7µF ±10% 6.3V X6S SMD 0805	C4	CMP-08246-006468-1	Up to date	1	TDK	C2012X6S0J475K125AB	Not Recommended for New Design	Mouser	810-C2012X6S0J475K1B	0.18	0.18
	C1206C106K4RACAUTO	CAP CER 10UF 16V X7R 1206	C6, C10, C16, C17, C19	CMP-03020-003375-1	Up to date	5	KEMET	C1206C106K4RACAUTO	Volume Production	Arrow Electronics	C1206C106K4RACAUTO	0.1727	1.73
	UMK316BJ105KD-T	None	C7	CMP-14477-000720-2	Up to date	1	TAIYO YUDEN	UMK316BJ105KD-T	Volume Production	DigiKey	587-2401-1-ND	0.23	0.23
	C0402C103K4RAC	C0402 10,000 pF X7R 10.00% 16 V	C8	CMP-03020-004015-1	Up to date	1	KEMET	C0402C103K4RAC	Volume Production	Mouser	80-C0402C103K4RAC	0.15	0.15
	C0805C222K5RACTU	Multilayer Ceramic Capacitor, C Series, 2200 Pf, -10%, X7R, 50 V, 0805 [2012 Metric] Rohs Compliant: Yes	C9, C12	CMP-2007-01168-2	Up to date	2	KEMET	C0805C222K5RACTU	Volume Production	RS (Formerly Allied Electronics)	C0805C222K5RACTU	0.02	0.04
	C0603C104M3VAC	C0603 0.10 µF Y5V 30ppm/°C 20.00% 25 V	C11, C15, C18, C20	CMP-03020-028681-2	Up to date	4	KEMET	C0603C104M3VAC	Volume Production	Mouser	80-C0603C104M3VAC	0.1	0.4
	JMK107BJ225KK-T	None	C13, C14	CMP-14477-003887-2	Up to date	2	TAIYO YUDEN	JMK107BJ225KK-T	Volume Production	Mouser	963-JMK107BJ225KK-T	0.13	0.26
	SML-D12V8WT86C	LED RED 1608 SMD	D1	CMP-08952-000027-1	Up to date	1	ROHM	SML-D12V8WT86C	Volume Production	DigiKey	SML-D12V8WT86CCT-ND	0.23	0.23
	LSM0603453V	LSM0603453V LED SM0603 3V - /1000/-mcd Green | VCC (Visual Communications Company) LSM0603453V	D2, D3, D4, D5	CMP-00731-94024739-1	Up to date	4	VCC	LSM0603453V	Volume Production	Arrow Electronics	LSM0603453V	0.0824	0.824
	(D)S2B-PH-K-S (LF)(SN)	CONN HEADER R/A 2POS 2MM	J1	CMP-17439-000701-1	Up to date	1	JST	(D)S2B-PH-K-S (LF)(SN)	Unknown				
	Micro SD Card reader		J2			1	Molex	104031-0811	Volume Production	Arrow Electronics	1040310811	0.7979	1595.8
	691103110003	1031 Series 3.5MM Pitch Straight, Pcb Terminal Block, Through Hole, 3 Way	J3	CMP-1502-03255-3	Up to date	1	Wurth Elektronik	691103110003	Unknown	DigiKey	732-2746-ND	1.08	1.08
	FTSH-105-01-F-DV-K	Male Header, Pitch 1.27 mm, 2 x 5 Position, Height 6.12 mm, RoHS, Tube	JS1	CMP-2000-05352-1	Up to date	1	Samtec	FTSH-105-01-F-DV-K	Volume Production	Avnet	FTSH-105-01-F-DV-K	2.12	2.12
	61300411121	THT Vertical Pin Header WR-PHD, Pitch 2.54 mm, Single Row, 4 pins	P1, P2, P3	CMP-1502-01064-4	Up to date	3	Wurth Elektronik	61300411121	Unknown	Mouser	710-61300411121	0.19	0.57
	MCT06030C1001FPW00	RES SMD 100 OHM 1% 1/8W 0603	R1, R2, R3, R4, R5	CMP-02407-005727-1	Up to date	5	Vishay	MCT06030C1001FPW00	Volume Production	Mouser	594-MCT06030C1001FPW	0.024	0.24
	AC0603JR-7W10KL	RES 10kΩ 5.00% 0.2W 0603	R6, R9	CMP-03412-040683-1	Up to date	2	Yageo Group	AC0603JR-7W10KL	Volume Production	Mouser	603-AC0603JR-7W10KL	0.013	0.13
	AC1210FR-07470RL	RES SMD 470 OHM 1% 1/2W 1210	R7, R8	CMP-2005-02165-2	Up to date	2	Yageo Group	AC1210FR-07470RL	Volume Production	DigiKey	13-AC1210FR-07470RLCT-ND	0.13	0.26
	BT840F	RX TX RX MODULE BT TRC ANT SMD	SoC	CMP-216577-000003-1	Up to date	1	Fanstel	BT840F	Unknown	DigiKey	1914-1019-1-ND	13.22	13.22
	JS102011SAQN	SWITCH SLIDE SPDT 300MA 6V	SW1	CMP-2000-06501-2	Up to date	1	C&K Components	JS102011SAQN	Volume Production	RS (Formerly Allied Electronics)	JS102011SAQN	0.67	0.67
	430182043816	Switch Tactile N.O. SPST Round Button Gull Wing 0.05A 12VDC 1000000Cycles 1.57N SMD Reel	SW2, SW3, SW4, SW5, SW6	CMP-1452-00013-5	Up to date	5	Wurth Elektronik	430182043816	Unknown	Mouser	710-430182043816	0.53	2.65
	Gutmic		U1			1	Same Sky	CMM-4030DB-26354-TR	Volume Production	DigiKey	102-5094-1-ND	1.88	1.88
	AmbientMIC		U2			1	Same Sky	CMM-4030DB-26354-TR	Volume Production	DigiKey	102-5094-1-ND	1.88	1.88
	LT1763CDE-2.5#TRPBF	500 mA, Low Noise, LDO Micropower Regulator, 1.8 to 20 V Vin, 2.5 V Vout, 12-pin SON (DE-UE-12), -40 to 125 degC, Pb-Free, Tape and Reel	U3	CMP-0476-00457-1	Up to date	1	Analog Devices	LT1763CDE-2.5#TRPBF	Volume Production				
	PCM5102APWR	IC DAC 16/24/32BIT 384K 20TSSOP	U4	CMP-04861-000013-1	Up to date	1	Texas Instruments	PCM5102APWR	Volume Production	DigiKey	296-36707-1-ND	3.97	3.97